Prestressing: recovery of the lost art

Simon Bourne BSc MSc DIC CEng FICE FIStructE Consultant and former owner of Benaim

Introduction

I am delighted and very proud to have won the IABSE Milne Medal 2012 and this paper outlines some thoughts about design and prestressing, and the critical importance of understanding construction. I focus on post-tensioned bridges, as this is the technique generally used for spans over ~30m.

I was the first employee of Benaim in 1982 and worked for the company until 2011 when I left to operate as an independent consultant. Benaim specialises in the design of structures for contractors and I have always had an interest in buildability and speed of construction, and how they can add value. I am currently Chairman of the Concrete Bridge Development Group (CBDG) and one of its current objectives is very pertinent, which will become apparent.

I was fortunate to have worked at Benaim for nearly 30 years, and to have had a close relationship with Robert Benaim, who is undoubtedly the best bridge engineer in the UK over the last 40 years. The beauty of Benaim was that the majority of its schemes, being developed with contractors, all progressed through detailed design to construction. Part of Benaim's culture was to "make the complex simple" and I will return to this thought frequently.

I have also been fortunate to have had a major role in many award-winning bridges, which have been recognised for their elegance, economy, creativity and innovation. These include Cardiff's East Moors Viaduct (Figure 1), the River Dee Viaduct[1], the Belfast Cross-Harbour Road and Rail Links[2], the STAR LRTS Viaducts[3], the A13 West of Heathway Viaduct[4], the Bhairab Friendship Bridge[5], through to the multi-award winning Clackmannanshire Bridge[6]. All of these schemes were post-tensioned and designed for a contractor.

Figure 1 East Moors Viaduct. Precast segmental scheme with internal post tensioning

Figure 2 Clackmannanshire Bridge. Launched scheme with external and partial post-tensioning

I should note that I am not opposing steel-composite structures – I have designed many steel structures too. However, I do feel that prestressing has some real benefits in the market, but that much of this understanding has been eroded over the last 20 years.

Demise of prestressing

The demise of post-tensioning in the UK stems back to the Highways Agency's decision to implement a moratorium in 1992. This was attributed partly to the collapse of the Ynys-y-Gwas Bridge in 1985, though the style of its prestressing was different to that being generally used in the 1990s. The CBDG was set up in 1992 to tackle these issues, and the introduction of the now superseded Technical Report 47 (TR47) entitled *Durable Bonded Post-Tensioned Concrete Bridges* in 1996 was a major step forward in improving the techniques for the grouting of post-tensioned cables. However, the loss of confidence in post-tensioning in the UK was almost fatal to its use, though the same concerns were never really taken on board elsewhere in the world. In the UK, the moratorium was relaxed in 1996, but the damage was done. Though internal prestressing could still be used (except in precast segmental bridges), external prestressing came to the fore. Even with external cables, very few post-tensioned bridges were then built in the UK and the dominance of steel-composite solutions began. When prestressing was considered, external cables became more fashionable, as they were more easily inspected and replaced. Of course, with the improved grouting technologies after TR47, the need to replace cables was effectively removed. I have never liked the shift towards external cables – they have their uses for some construction methods, but internal cables are fundamentally more appropriate and satisfactory from a wide range of engineering viewpoints. They have a better eccentricity and ultimate performance, but most importantly they do not require excessively large anchorage and deviator blocks – blocks that contain considerable volumes of concrete and reinforcement.

However, external cables allowed the use partial prestressing, which has always seemed to be an elegant solution, not requiring the section to be fully compressed. In the UK and Ireland, Benaim designed three incrementally launched bridges that took advantage of the partial prestressing clauses in BD58[7], culminating in the 1,188m long Clackmannanshire Bridge (Figure 2). This hugely successful project featured

heavily in my submission for the Milne Medal. Elsewhere in the world, certainly away from corrosive road salts, post-tensioning was being extensively designed and built – using either internal or external cables, or a mixture – all to suit the construction method rather than any particular concerns over the cable/protection system. The introduction of EC2[9] has also caused some discussion about the competitiveness of prestressing. Its clauses are slightly different from previous practice in the UK, but I shall address these areas later.

Overall, this loss of confidence in the UK has meant that nearly a generation has passed who have never really experienced the benefits of prestressing. We now have consultants who do not know how to design post-tensioned structures, together with contractors who do not know how to price, resource or programme them either. This downward spiral has effectively wiped out the previous expertise.

Recovery of prestressing

UK consultants and contractors have always had a strong presence in the global markets, but many retrenched to the buoyant UK market over the period from 1990. Many of these firms have now lost their post-tensioning skills and are thus not adequately skilled to move back in to the global markets where prestressing is the dominant feature of major bridges. Overseas companies are thus taking a strong hold. We need to recover the level of expertise required for post-tensioned bridges, so that UK engineers should be able to lead the world in their knowledge and use of prestressing.

How this recovery can occur is the essence of this paper and hopefully it will start to show the key skills needed. The final section describes the way forward with a range of ideas that will help – one of the features is the CBDG's new Technical Guide: *Best Construction Methods for Concrete Bridge Decks* which will be published this year. As I describe later, the proper understanding of the best construction method is actually the key component to create a competitive, and elegant, prestressed concrete solution. With this knowledge will come the increased confidence that is needed to re-establish post-tensioned solutions as being of high quality and value.

Understanding design

Robert Benaim notes in his excellent book[9] that a bridge engineer has twin obligations – to use his client's money wisely and to produce a structure for society that will enhance the built environment. These two elements are the classic balance between form and function. It was Vitruvius in 50BC who noted in his *De Architectura* the three principles of *firmitas, utilitas and venustas*. *Firmitas* is the attribute of durability and robustness – a given for any structure. *Utilitas* is the utility, or function of the structure, i.e. the wise use of your client's money. *Venustas* is the beauty, or form – the elegant structure that delights society.

Design has become too complicated in recent years and engineers must better understand the fundamentals of bridge design, without being overly distracted by complex analyses or codes of practice. No amount of analysis or debate will rectify an inappropriate solution. The key task will always be to get on the right path in the first place, which should be a well-trodden process for an experienced engineer with good judgement and expertise. Such engineers will then be able to assimilate many complex ideas and constraints in to simple, elegant solutions. This task of making the complex simple requires the skill, creativity and belief of a powerful figure in the design team, ideally throughout the process, but certainly at the key stage of getting on to the right path. I suggest that the best resolution of this balance between form and function is when it is all held in one person's mind.

I will show that many decisions that are needed are not driven by the minutiae of complex analyses, or nuances of codes, but by the practicalities of construction. At the end of the day, we may only need to choose between whether we use a B16 or a B20 bar. Many people thought that Benaim used to carry out hugely complicated analyses to squeeze every drop out of the codes for our contractor clients – this was rarely true. The important point is always about getting on the right path in the first place. My own preference is for very simple computer models, all verified by hand calculations and sketches drawn to scale. In this way, one understands the issues at hand and can take the correct decisions. I have never used complex FE models, for example, even for the most complicated pier diaphragm or anchorage zone, preferring more simple strut and tie methods, which aid the understanding and detailing much more readily. The flow of forces around the section must be fully understood, and I find it beneficial to always look at the two extremes of the problem. For example, with a model that tries to represent a partially fixed end to a beam, does it accurately represent a simple span if the springs are reduced to zero or a fixed-ended span if the springs are made rigid? To examine the issue of partial prestressing, I will show a transition of prestress from 100% (fully compressed) to 0% (reinforced concrete). A number of factors gradually change throughout the transition, but looking at the extremes is hugely valuable in the assessment.

We must remember that we are not designing aeronautical structures or structures that are mass-produced, we are generally designing one-off pieces of civil engineering that will often be built in cold, wet and remote construction sites, where great levels of accuracy in design are simply not justified or possible. The important point will not be the 3rd significant figure of the calculation, but whether the fixer can actually fit the B20 bar around the prestressing duct. Ensure that you are on the right path in the first place – the best and most elegant choice of form, section, construction method, cable or bar size – not the minutiae of the analysis or code.

We are engineers, not technicians or analysts, and we must use our skills creatively and judgement wisely to put our efforts where they can best be used, i.e. in solving problems frugally, to find rational solutions that are simple and elegant in modelling, analysis, design and detail, as well as being quick and easy to build.

"Making the complex simple" is the only way to design creative solutions that add real value – something at the forefront of our

Figure 3a
River Dee Viaduct

Figure 3b
In situ balanced cantilevering with internal post-tensioning

minds when designing the River Dee Viaduct (Figure 3a and b). Then we will have satisfied those two key elements of being wise for our client and of creating an elegant legacy that delights society.

Understanding prestressing

Bridge engineers often need to design all over the world, allowing for elements that others can more easily ignore (e.g. moment rounding, shear lag nor warping). They therefore tend to be more adroit than others at using multiple codes and considering the basic behaviours of a structure. The laws of physics neither change with location, nor with time, and thus being able to appreciate behaviour is more valuable than applying the minutiae of the codes. At some point in the detailed design the particular code must, of course, be applied – but it rarely determines the main decisions, i.e. getting on the right path.

Of all the available materials to a bridge engineer, prestressing is the most challenging as it is an active, not passive, system. One cannot hide any ignorance by adding more steel, as the addition of prestress is just as likely to be detrimental to the section as is its removal. The engineer must calculate all the effects to an appropriate level of accuracy along all sections of the member, and then design the prestress to counter them, at all locations. This process needs a determined effort from a skilful designer. All the while, the designer must be considering the critical construction issues, as they affect all decisions concerning the section, cable and bar layouts.

Many issues related to prestressing are not seen with other materials. I highlight four here:

Kern height

The kern height of a section defines the zone within which prestress can be applied without producing tension (Figure 4). The top kern height, a_t (above the elastic neutral axis defined by y_t and y_b) is Z_b/A and the bottom kern height a_b is Z_t/A. These are vital components in calculating the required prestress force P as the lever arm for M_{sag} at midspan, for example, is then defined as $a_t + e_b$, i.e. $P = M_{sag}/(a_t + e_b)$. Alternatively , if moment range is critical, then P is defined by $M_{range}/(a_t + a_b)$. Cables zones can be similarly calculated for the whole span. Compressive stress limits are not usually critical. The efficiency of the section η is defined as $(a_t + a_b)/h$ – it defines how effective a section is in carrying the prestress. It is 33% for a rectangle (i.e. the middle third) and 50-60% for typical I-beams or box girders. It needs to be as high as possible to avoid wasting prestress by compressing thick webs. The inertia of the section I can be rapidly estimated by the exact expression , $I = A\eta y_t y_b$. A is easy to calculate, η is around 55% and the product $y_t y_b$ is insensitive to exactness. So, any easy way to calculate the inertia, I in one line! Z, a and e follow in the next few lines, allowing P to be estimated almost immediately. A quick check of section stresses, i.e. P/A +/- Pe/Z +/- M/Z, should always be carried out to confirm the solution.

Figure 4
Kern height

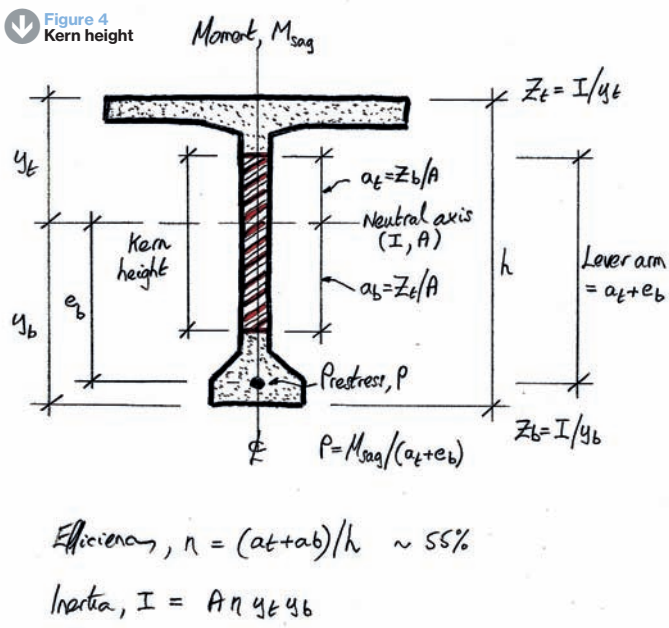

Figure 5
Parasitic moments

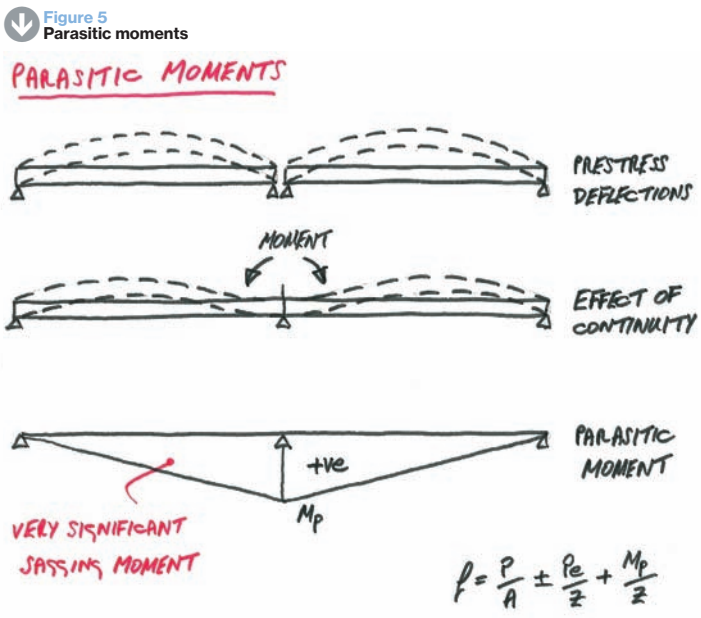

Parasitic moments

The secondary, or parasitic moment M_p is created when the member is indeterminate – it is a sagging moment that varies linearly between supports (Figure 5). It will be a very significant moment equal to a large percentage of the midspan Pe. Its value must be iterated with the required values of Pe at each section, as M_p is dependent on the Pe profile of the whole structure. This is a simple concept but is often hopelessly misunderstood. Its calculation can be simple using numerical integration with the flexibility method, but its actual value is often lost within a piece of software, where Pe and M_p are merged in to one. This loss of visibility of M_p is dangerous and does little for the understanding of the engineer. Engineers must see the effects of M_p as otherwise they will not see how M_p can be used to their benefit, which it can. For example, by dragging moments toward sagging, it will tend to equalise the midspan sags with the support hogs – perhaps allowing the same numbers of cables at each location, which may be beneficial for construction (Figure 6). M_p can be manipulated by moving the cable where it has some latitude within its zone, i.e. around the ¼ point areas, but only if one understands what effects this manipulation is having! Influence lines for M_p used to be of great benefit, but I fear that these have gone out of fashion. When bridges are built in stages, the creep of both dead loads and M_p needs to be carefully understood, though it tends to work in opposite directions, negating the need for too much precision in the calculation of the creep factor. Again, M_p can be controlled by considering at which stage each cable is stressed.

Figure 7
Stability of prestressed members

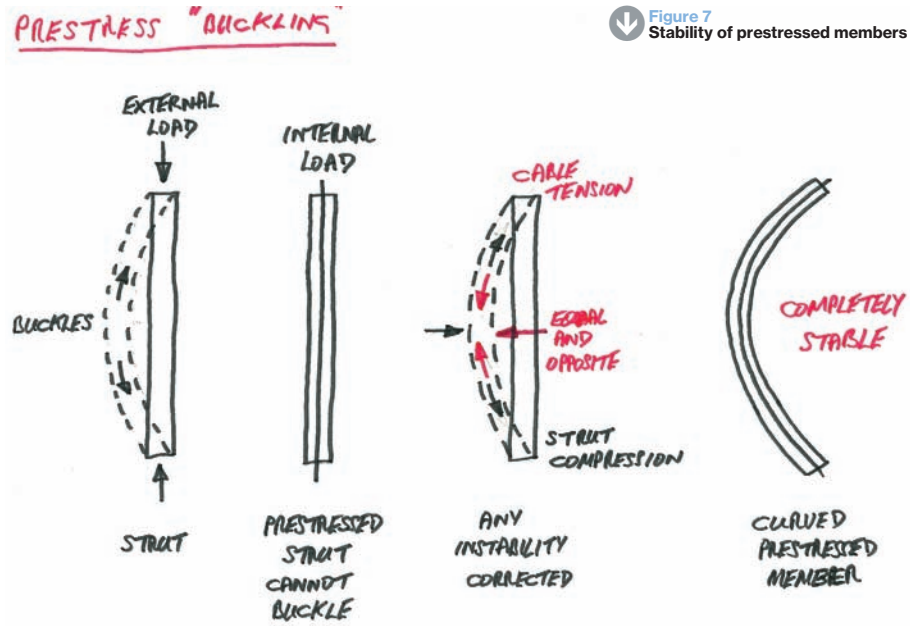

Buckling

Prestressing is an internal force, not an external action and this fact has unusual effects on the section, which again are often misunderstood. Consider, for example, a slender column (Figure 7): A reinforced or steel column would try to buckle under an externally applied load. However, the same load applied as prestress within the section cannot buckle the member – as long as the prestress is bonded. As the compression in the member tries to buckle, the equal and opposite tension in the cable prevents it doing so. As such, a slender member can never buckle under the prestress alone. Furthermore, a curved prestressed member cannot buckle either – it simply has an axial P/A.

Figure 6
Parasitic manipulation

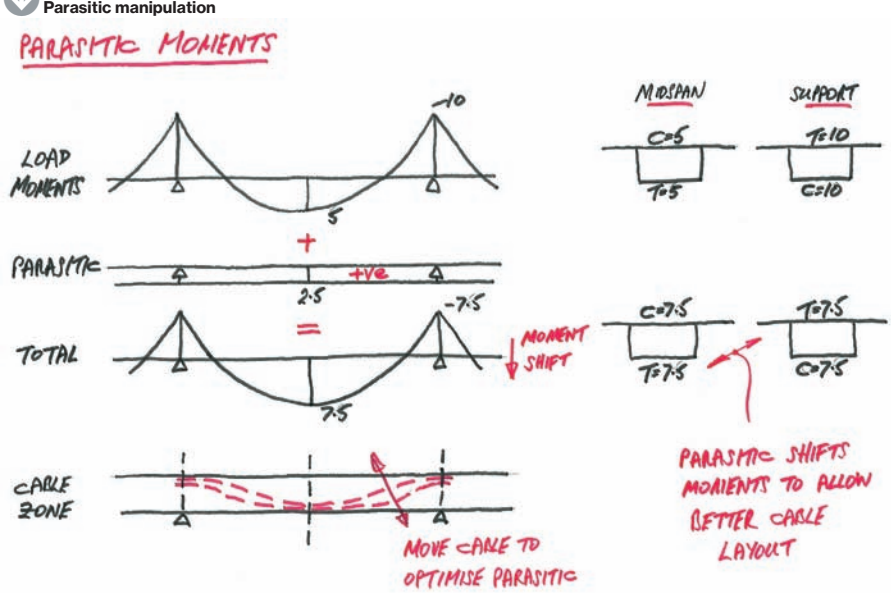

Anchorage zones

Anchorage zones of prestressed members are also misunderstood. This is very dangerous as these zones are the most highly stressed areas and the most heavily congested. The worst case scenario in such a zone is for an engineer to add more reinforcement than is necessary (to hide his ignorance), thus making the area overly congested and prone to poor compaction. Of the three sections of anchorage zone steel (besides the obvious need for any shear, torsion or bearing steel), it is the equilibrium steel that seems least understood. Spalling and bursting steel requirements are normally quite mechanical and it is difficult to get them wrong, though they still need to be carefully combined with other steel in the area. Equilibrium steel is simply the steel needed to transmit the prestress force into the section. It is best analysed, designed and detailed using struts and ties, and it can be beneficially manipulated too. Consider two central anchorages on a web with the cables passing horizontally into the section. A simple strut-tie model shows the need for a vertical tie at the back of the block. If the two cables curve into the section though, there is a compression produced between the cables. This compression is equal and opposite to, and in the same location as, the tie, i.e. no net force (Figure 8). The section simply contains two curved and effectively independent prestressed members, both of which are stable and under axial load (Figure 9). There may be some strain incompatibility but there is no force and therefore no steel needed. So, understanding the forces correctly can enable less steel to be fixed.

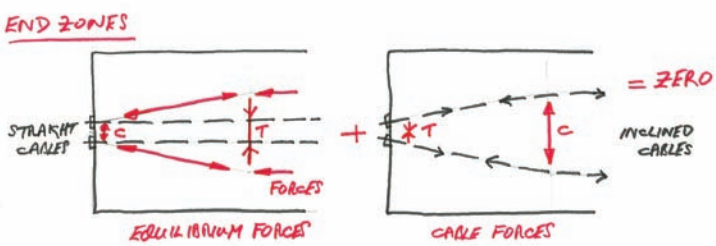

Figure 8
End zone effects

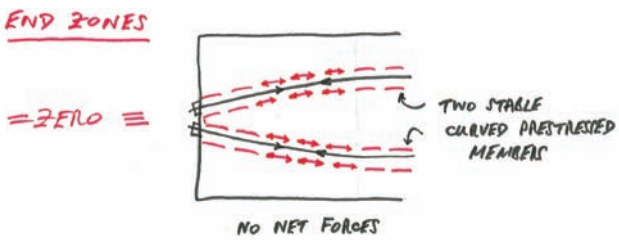

Figure 9
End zone manipulation

Understanding construction

No bridge engineer can design a major member without knowing how it will be built – the construction method will significantly affect the forces. Having spent my career designing structures for contractors, I like to think of construction as the driver of both form and function. Using my contractor client's money wisely entails both the economical use of materials, labour and plant, and the buildability of the scheme, i.e. its ease and speed of construction. Frugal and simple solutions to serve the above will, with some additional care for the aesthetics, almost certainly be designed to suit the flow of forces and will therefore be elegant. Transportation structures often need little more to improve their form, though I have frequently used the collaboration with an experienced architect as a welcome addition. Nevertheless, a good appreciation of context, scale, lines and balance is still vital for the engineer.

The choice of construction fundamentally affects the costs and the need for a further bank of knowledge in this area is an urgent priority. The basic parameters of the scheme such as the span, deck area, length and alignment will start to suggest which construction methods might be appropriate. The final choice will then depend on many other parameters such as site access and availability, construction programme, phasings, labour rates, resource requirements, material quantities and costs, traffic management, temporary works layouts, transportation issues and craneage or erection.

The differences between whether the section is fully prestressed, partially prestressed or just reinforced will be examined next. The conclusion is that the differences in cost of the section might be small, and often swamped by the differences in the construction method that is chosen. How well the engineer defines this method and how well the contractor manages to adequately plan and cost the scheme will determine if it will be competitive against the dominant steel-composite solutions in the UK. It is noteworthy too, that many of the decisions concerning the section and its details are determined by practicalities, i.e. whether the link steel is clear of the prestressing duct, not necessarily by the refinement of the analysis or code – yet again construction knowledge is vital.

For prestressed concrete bridges, there are a wide range of construction methods – many more than for steel-composite bridges. This wide range of options, as well as the previously described loss of confidence and skill, is to blame for engineers not being able to make good choices. I have often seen that steel-composite solutions are favoured, but only because the concrete solutions against which they are competing are hopelessly inappropriate or have been poorly priced and programmed. This lack of prestressing and construction knowledge needs to be addressed. I will describe the way in which a forthcoming CBDG Technical Guide will help to address these issues, enabling better value concrete options to be re-established.

For the range of typical spans where post-tensioning is best used (i.e. above ~30m), there are several construction methods that are suitable. These are casting *in situ* on falsework or beams, precasting of whole beams/spans and various means of lifting/launching them in to place, precast segmental in its various guises, incremental launching (Figure 10) and *in situ* balanced cantilevering (Fig. 3b). Many of these methods can accommodate spans up to 70-80m, which is within the range that I am trying to address here. Spans closer to 100m or more, are yet more specialised and are not described further – suffice to note that balanced cantilevering with precast or *in situ* segments is readily competitive in spans up to 150m and 300m, respectively. The range of options can be shown in tabular form depending on the span (Figure 11).

I have also been developing a new modular precast concrete bridge since 2005. This was created in response to the dominance of steel-composite schemes in the UK and it featured heavily in my submission for the Milne Medal (Figure 12a and b). It utilises precast concrete shell segments, which are subsequently infilled with an *in situ* core that is then internally post-tensioned[10]. It also has a range of construction options, such as lifting or launching, though my recent work has suggested that it might be best promoted as a system that is built on falsework or beams.

Figure 10
Clackmannanshire Bridge. Incremental launching

Bridge type	Span (m)								
	10 to 20	20 to 30	30 to 40	40 to 50	50 to 60	60 to 70	70 to 80	80 to 90	90 to 100
Flat concrete slab									
Voided concrete slab									
Concrete twin-rib									
Standard precast beams									
Purpose-made precast beams									
Steel-composite plate girders									
Steel-composite box girders									
Concrete box on falsework									
Modular precast concrete bridge									
Precast segmental span by span									
Incrementally launched concrete box									
Whole span precast									
In situ balanced cantilever									
Precast segmental balanced cantilever									
Concrete arch									

Range Most competitive in UK *Dependent on total deck area, alignment, depth*

Figure 11
Bridge type vs span

Section comparisons

In an attempt to make some sense of the range of sections available, I have made a simple comparison between some. It is not extensive, but should be usefully indicative of the issues. I am concentrating on the 30-80m span range, i.e. the most common for major bridges and the most likely (in the UK at least) to be currently progressed as steel-composite. So, consider a 60m simple span carrying dead load (DL), superimposed dead loads (SDL) of 8kN/m to represent the surfacing and a 3m width of highway live loading (LL of 8kN/m^2, say). Let us assume that it has a 250mm top slab and a single web of suitable size. I know that at around 60m, the section is more likely to be a box girder and that the number of webs is optimised when the web carries significantly more than a 3m width, but the conclusions are still the same. I have made the section 3m deep, which is a little slender for concrete, but it does show parity across all sections.

I have made the assessment independent of particular codes, though there is some reference to both BS5400[11] and BD24[12], as well as EC2. My point is that the majority of the decisions are not particularly related to the codes, but more to good engineering judgement or the practicalities of construction.The assessment was begun in order to investigate the suitability of modern post-tensioning techniques, primarily those of partial prestressing. This assessment was best investigated by looking at the whole transition from full prestressing (PSC100%), to partial prestressing with high levels of prestress (PSC80%), to partial prestressing with low levels of prestress (PSC40%), to reinforced concrete (RC0%), and finally to steel-composite girders. I analysed each section by hand on two sheets of paper, showing how easy it is to design a section with a reasonable level of expertise.

PSC100% is compressed under all loadings, and this condition is critical in sizing the cables. This is the normal requirement for internal cables in both BS5400 and EC2. The web is made as thin as possible, to reduce weight and keep the efficiency η high. This thin web limits the

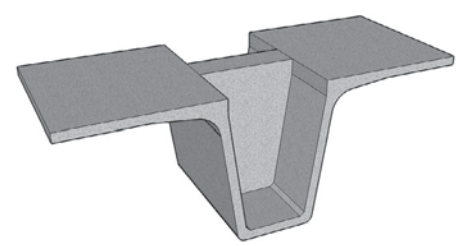

Figure 12a
Precast shell unit

Figure 12b
Varying depth options

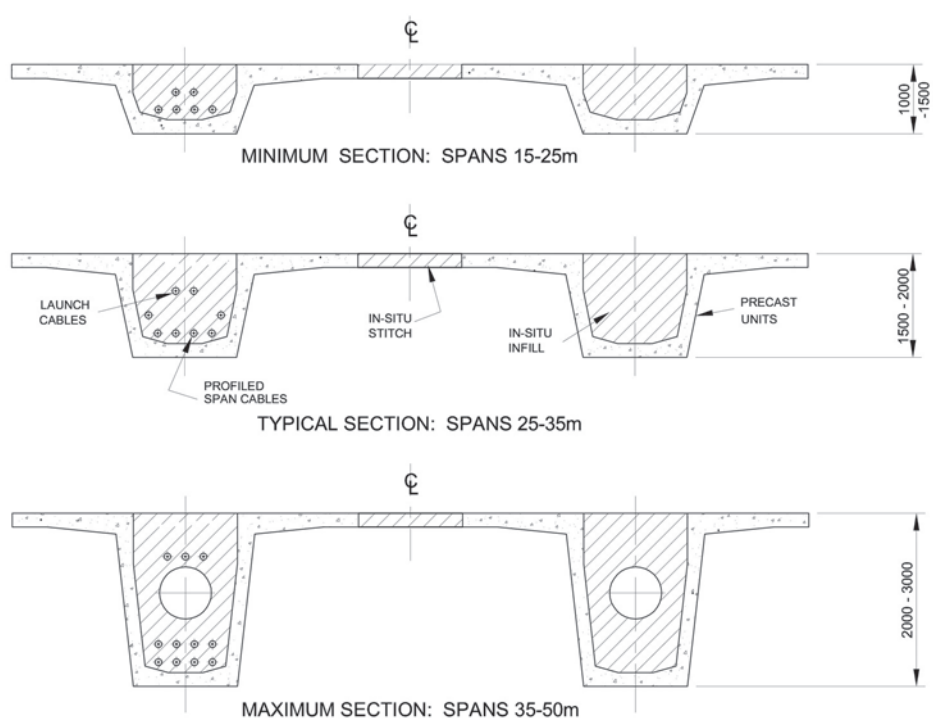

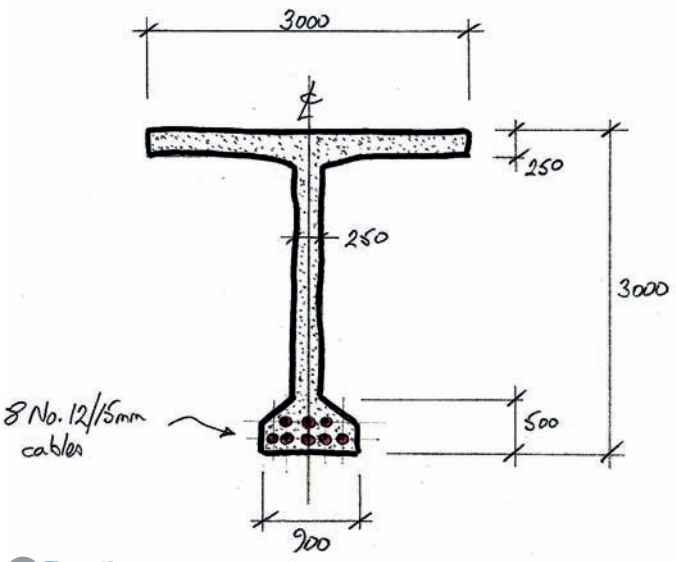

Figure 13
Fully prestressed section - PSC100%

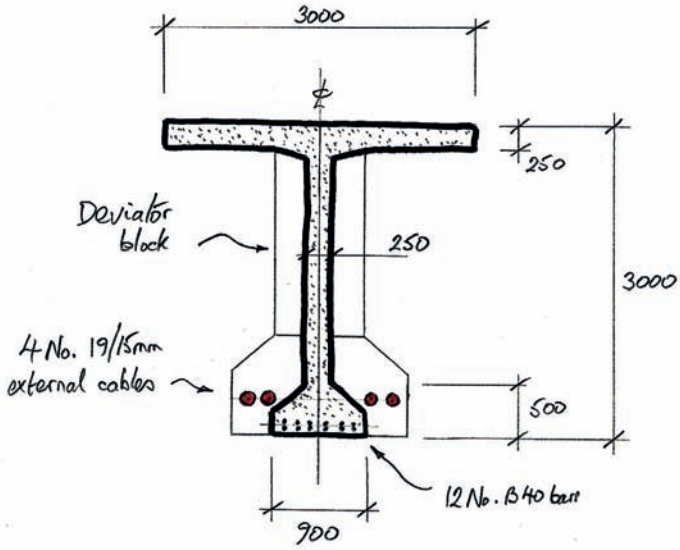

Figure 14
Partially prestressed section - PSC80%

cable size to 12/15mm. A large proportion of the shear is carried by the inclined prestress, allowing the web to remain at 250mm, though a thickened anchorage zone would be needed. The heel is sized for the 8 No. 12/15mm cables (Figure 13). SLS design to zero tension produces a section that also satisfies ULS with no further reinforcement. There are no compression issues in the section, though the heel is highly stressed at transfer.

PSC80% is compressed under all permanent loadings (DL/SDL) and is then checked for SLS crack widths under LL. This was the requirement for external cables in BS5400 and BD58 – it makes good sense and EC2 may be mistaken in not identifying this condition. With external cables, the web is also kept as thin as possible with a good proportion of the shear still carried by the prestress. Large deviator blocks are now needed at around the 1/3 points. The heel is sized for the reinforcement needed at ULS. There are 4 No. 19/15mm cables needed to compress the DL/SDL at SLS, but ULS requires additional capacity, with 12 B40s (Figure 14). SLS checks under LL show crack widths of 0.15mm, i.e. reinforcement for ULS is sufficient for SLS. There are no compression issues in the section.

There is no particular guidance on where to set a next lower level of prestress – I have taken it at about 40% using 2 No. 19/15mm cables. PSC40% is not now checked for decompression, but for SLS crack widths under either permanent loads or all loads. EC2 only requires the section to be checked under permanent loads. It might be suggested that it is sensible to check crack widths under LL. I conclude that it does not matter, as once the section is sensibly sized to ULS, crack widths are adequate in both cases. Only a small proportion of the shear is now carried by the prestress, requiring a thicker web. The heel is sized for the greater amount of reinforcement needed at ULS, with 24 B40s (Figure 15). SLS checks under DL/SDL show crack widths of 0.15mm, which increase with LL to 0.25mm. There are some compression issues developing in the top slab and a small amount of compression steel is added.

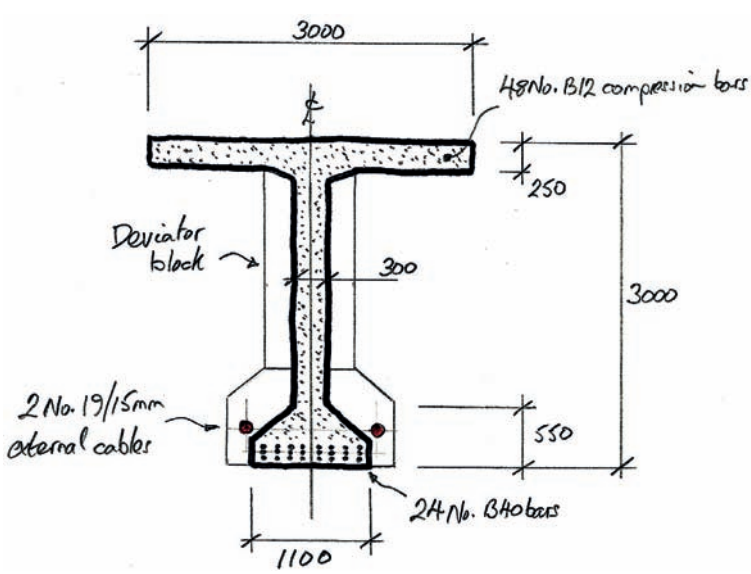

Figure 15
Partially prestressed section - PSC40%

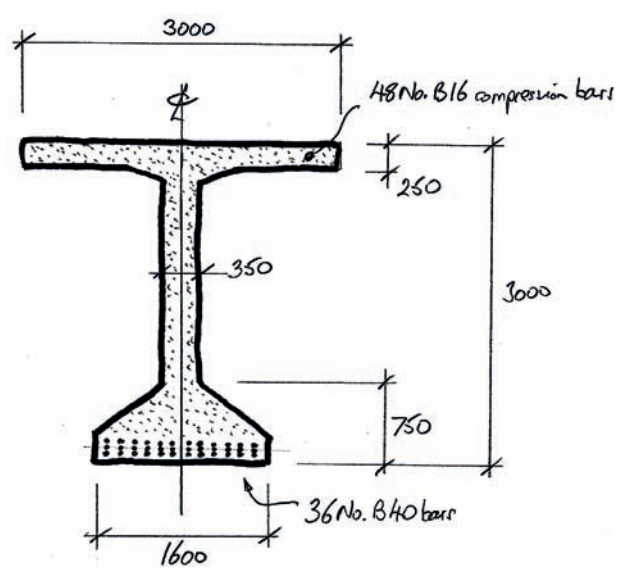

Figure 16
Reinforced concrete section - RC0%

And so, to reinforced concrete (RC0%). EC2 only requires the section to be checked for crack widths under permanent loads, whereas BS5400 requires that crack widths are checked under LL. It does seem to be good sense to check crack widths under LL, though I understand that such a check is not a durability issue. Anyway, I conclude again that it does not matter, as once the section is sized to ULS, crack widths are broadly adequate. Note that the crack width calculations in the two codes, while being different, do seem to produce the same results. None of the shear is now carried by prestress, requiring an even thicker web. The heel is sized for the even greater amount of reinforcement needed at ULS, with 36 B40s (Figure 16). SLS checks under DL/SDL show crack widths of 0.2mm, which increase with LL to 0.3mm. There are some more significant compression issues in the top slab and a reasonable amount of compression steel is now added.

As a conclusion to this transition, I consider the S355 steel-composite girder. Compared to the RC0% section, this section has the same 250mm thick concrete slab, a thin steel web instead of a thick concrete web, and a steel bottom flange instead of the reinforcement. Not actually too dissimilar! I examined two methods of sizing the section – using a thin web and then assuming a non-compact approach, with an elastic buildup of ULS stresses. Alternatively, I looked at using a thicker compact web (25mm) and assumed a ULS design on the plastic modulus, which was checked to be less than yield under the build up of SLS stresses using elastic moduli. Either way, the steel tonnage was almost identical. As such, I only describe the thinner web option here, as this seems intuitively more correct. The web is 12mm, with stiffeners to boost shear capacity, and the tension flange is 700mm by 50mm. The top flange is sized to suit the condition when the slab is poured and is assumed to be fully restrained, which does require some cost and effort of temporary bracing (Figure 17). There are no compression issues in the top slab.

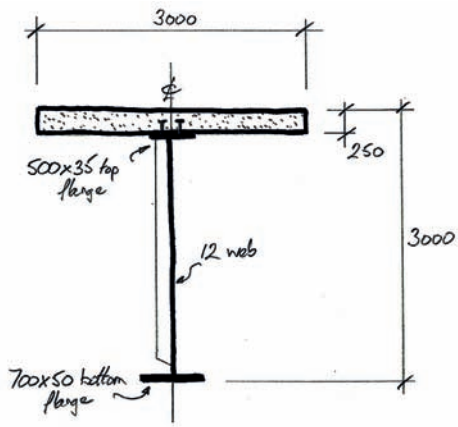

Figure 17
Steel-composite section

The deflections of each section are also of interest. The LL deflections of each section are not dissimilar at around 70mm, which is reasonable. However, the long-term deflections under DL/SDL and Pe (where appropriate) are quite different. PSC100% hogs upwards by 25mm, PSC80% sags by 50mm, PSC40% sags by 150mm and RC0% sags by a worrying 250mm. By comparison, the steel-composite scheme sags by around 200mm. These deflections can all be precambered, of course, but one of my concerns in using an RC (or lightly prestressed) section for a span of this length would be those worrying long-term deflections, and the obvious sensitivity to creep.

Table 1: Section transition comparisons

Section type	100%PSC	80%PSC	40%PSC	0%RC	Steel-Composite
Web thickness, t_w (mm)	250	250	300	350	12
Heel width (mm)	900	900	1,100	1,600	700
Prestress (f_y = 1,860)	8 No. 12/15mm internal	4 No. 19/15mm external	2 No. 19/15mm external	-	-
Bottom reinforcement (f_y = 500)	-	12 No. B40	24 No. B40	36 No. B40	-
Bottom steelwork (f_y = 355)	-	-	-	-	700mm by 50mm
Total main steel area, A_s (m^2)	0.014	0.027	0.036	0.045	0.035
Dead load, DL (kN/m)	41	43	49	56	26
Prestress force, P (MN)	14.4	11.4	5.7	-	-
Axial stress, P/A (MN/m^2)	8.6	6.8	2.9	-	-
Gross ULS shear, V_u (MN)	3.1	3.2	3.4	3.6	2.5
Prestress shear, Psinθ (MN)	2.0	1.0	0.5	-	-
Net shear, V = V_u-Psinθ (MN)	1.1	2.2	2.9	3.6	2.5
Net ULS shear stress, v_u (MN/m^2)	1.5	2.9	3.2	3.4	78
DL/SDL crack width, cw_{perm} (mm)	-	-	0.15	0.2	-
DL/SDL/LL crack width, cw_{total} (mm)	-	0.15	0.25	0.3	-
DL/SDL/Pe deflection, δ_{perm} (mm)	25 hog	50 sag	150 sag	250 sag	200 sag

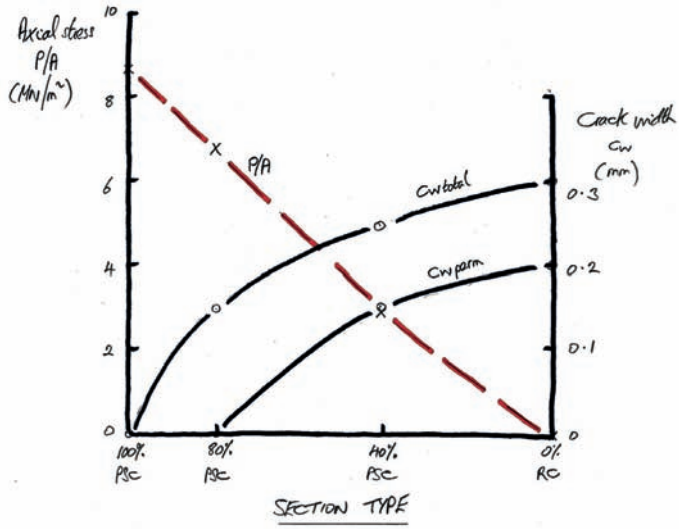

Figure 18
Axial stress and crack width transitions

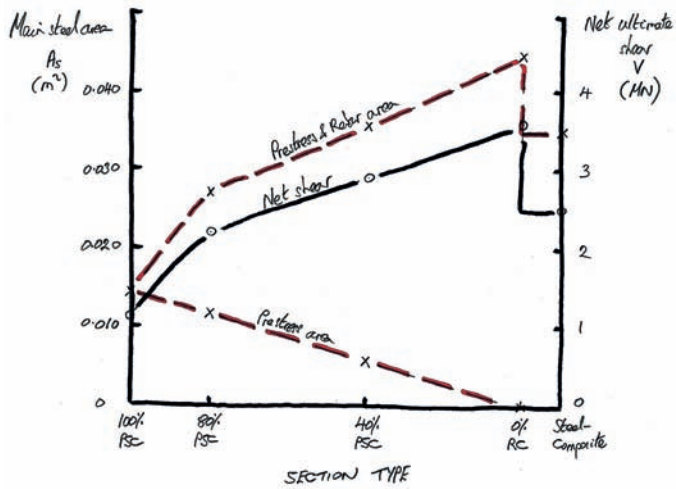

Figure 19
Steel area and net shear transitions

A summary of the key comparisons in this transition process is shown in Table 1 and Figures 18-20.

Using the basic quantities that derive from the above sections, Table 2 shows the comparative costs, based on 2012 UK cost data from a range of contractor sources. Checks are made at this stage, with historic data, for the correctness of the effective thickness, the kg/m³ of reinforcement or prestressing and the kg/m² of steelwork. The conclusion is that all the sections are relatively close in cost; all within 5-10% of the steel-composite scheme. The actual figures show the fully prestressed scheme to be the most competitive and reinforced concrete to be the least competitive, with the partially prestressed and steel-composite schemes sat in the middle ground.

However, there are three factors in the cost data that are important. Firstly, the ratio of the prestressing to reinforcement cost, with both figures as total costs to include material, supply, fixing, including (for prestressing) all duct, anchorage and jacking costs. This ratio is under 3 currently and needs to rise to about 5 to make RC0% competitive. Secondly, the comparison of prestressing and steelwork costs - the steelwork figure is again a total cost to include material, fabrication, the painting of plain steel or the supply of weathering steel, transportation and erection. To get parity of total deck costs, the prestressing cost needs to rise by 30%. Thirdly, the formwork and falsework costs for all the concrete schemes – this is the price to supply the particular construction method for the option that is chosen. This figure could be the cost of formwork, scaffolding and foundations, or formwork, temporary beams, props and foundations, or precasting, transporting and erection by lifting, or incremental launching, or travellers and props for balanced cantilevering (if the span were continuous). I have referenced these costs from 2012 cost data and a range of previous UK projects. The combined formwork/falsework figure is about £50/m² for vertical areas, but varies between £75/m² and £150/m² for horizontal areas, depending on the scale and simplicity of the method. Overall, I have shown these horizontal formwork/falsework costs at the higher end of the range, which is probably where a UK contractor would currently position them. A continental contractor, more familiar with prestressed structures, would position them lower down this range. Even at the highest end of the range though, the prestressed scheme is still the most competitive. Checks are again made at this stage, with historic data, for the correctness of the overall costs/m².

Of these three cost factors, the first two are determined by market forces, but the third is determined by the skill and

Figure 20
Permanent deflection transition

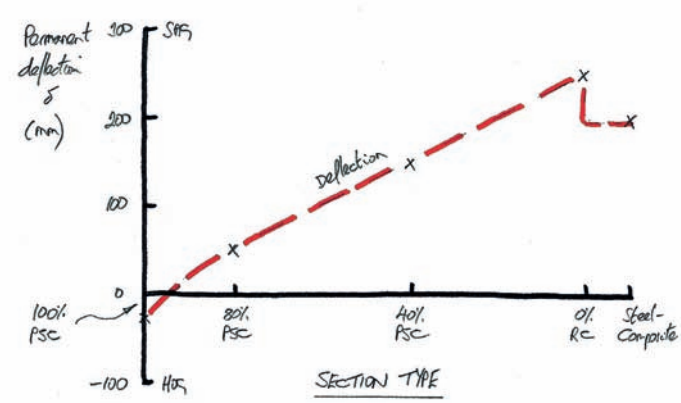

Figure 21
Cost variance comparisons

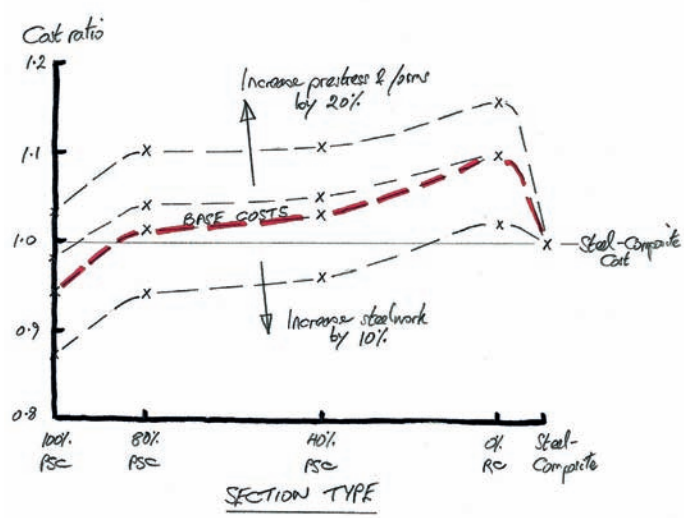

Table 2: Section cost comparisons

Section type		100%PSC		80%PSC		40%PSC		0%RC		Steel-Composite	
	Cost rate (£/)	Quantity	Cost (£k)	Quantity	Cost (£k)	Quantity	Cost (£k)	Quantity	Cost (£k)	Quantity	Cost (£k)
Concrete (m^3)	120	105	13	115	14	125	15	140	17	45	5
Reinforcement (t)	1,100	15	17	22.5	25	30	33	40	44	7	8
Prestress (t)	3,000	6.8	20	5.4	16	2.7	8	-	-	-	-
Vertical form (m^2)	50	380	19	390	20	390	20	400	20	-	-
Horizontal form (m^2)	125	220	28	230	29	240	30	250	31	-	-
Precast planks (m^2)	60	-	-	-	-	-	-	-	-	150	9
Steelwork (t)	2,000	-	-	-	-	-	-	-	-	40	80
Total Deck Cost (£)			96		103		106		112		102
Cost ratio compared to steel-composite			0.94		1.01		1.03		1.10		1.00
Increase prestress by 20% to £3,600/t	Cost ratio		0.98		1.04		1.05		1.10		1.00
Increase horizontal forms by 20% to £150/m^2	Cost ratio		0.99		1.07		1.09		1.16		1.00
Increase prestress and horizontal forms by 20%	Cost ratio		1.03		1.10		1.11		1.16		1.00
Increase steelwork by 10% to £2,200/t	Cost ratio		0.87		0.94		0.96		1.02		1.00

knowledge of the respective consultant and contractor, and it is a concern that the range of values, i.e. £75-150/m^2, is significant. Therefore, we need to improve these prestressing and construction skills, which is back to the essence of this paper. The sensitivity to variances in some of these parameters is shown in Figure 21.

Advantages of prestressing

I have concluded that a prestressed section is more economical than other comparable options, though with the obvious caveat that the section needs to be designed and detailed carefully by a knowledgeable consultant, and built efficiently in an easy and rapid manner by an appropriately experienced contractor. The indications are that the best section is closer to the fully prestressed or partially prestressed scheme with high levels of prestress (i.e. 80% or 100%), than to a less-heavily prestressed scheme (i.e. 40%), and I would certainly recommend that reinforced concrete sections are not generally suitable for spans in this 30-80m range. This conclusion seems intuitively correct too, in that the many other advantages of prestressing are then also more effectively mobilised. These 100% or 80% sections are fully compressed, or fully compressed under permanent loads, with no cracking, making them more durable. They utilise the benefits of concrete to a greater extent and are thus thinner, lighter and more elegant sections, which have greater stiffness and close to zero permanent deflections. Prestressing uses the least amount of steel and is an active system that carries the loads by directly opposing them, which is also more elegant and efficient from an engineering perspective than the reliance on passive steel. This same active system also carries a large proportion of the shear force, which is economical and appealing to one's engineering viewpoint. With less steel to fix, and less labour, the sections are also easier and quicker to cast.

Way forward for prestressing

I see the need for further guidance on the available construction methods for concrete bridge decks, which not only describe the basics for a designer, but also give the contractor reliable sets of data regarding the planning, programming, resourcing and costing of such schemes. This data would contain advice regarding casting options, formwork and moulds, transportation, temporary works, falsework and craneage, and erection methods. As mentioned previously, the CBDG will produce a new Technical Guide for publication this year.

In parallel, it will be necessary for bridge engineers to become better trained and more familiar with the simple parameters of post-tensioning, some of which I have begun to describe here. As I have noted, much of this required knowledge stems from the simple understanding of the practicalities of the section, rather than from the complexities of an analysis or the nuances of any particular code. I would urge all engineers to consider

more simple models and to use more simple design tactics, both of which will significantly enhance the ability of engineers to really understand the problems they face. Post-tensioning design does need great care, but the critical decisions in design and detail will always be related to getting on the right path. No amount of complexity will ever rectify an inappropriate decision or solution.

My modular precast concrete bridge system is also part of this innovative development. It brings together the best features of *in situ*, precast and post-tensioned construction to create a high-quality solution that is particularly designed to be used at any bridge site. The system accommodates any length, span (in the range 15m to 50m), width, skew or curvature, and it can be erected on falsework/beams, or by launching or lifting. The system is a competitive and robust solution, maintaining a simple and elegant character (Figure 22).

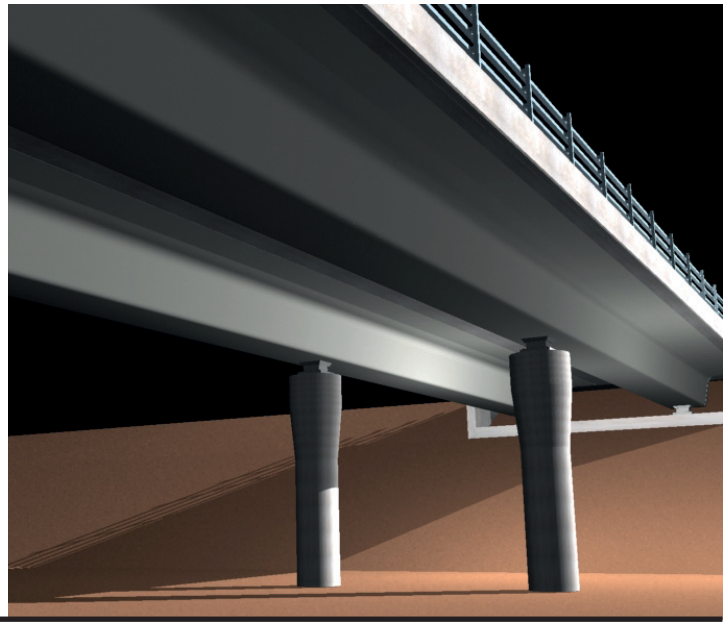

Figure 22 **Modular precast concrete bridge. Fully prestressed with internal post-tensioning**

Conclusions

I have demonstrated that post-tensioned structures (with relatively high levels of prestress), when carefully designed and wisely built, are very competitive in the market, as well as having a large number of other intrinsic benefits. Only by fully understanding prestressing and the various methods by which it can be sensibly constructed, can bridge engineers hope to make the right decisions – and get on the right path. Many of these decisions are determined by the practicalities of the scheme, not by analyses or codes, and I therefore urge engineers to always consider simplicity over complexity.

The forthcoming CBDG Technical Guide will help to explain many of the construction issues and, hopefully, this paper will help to improve the knowledge of engineers in relation to basic post-tensioning skills.

With these two sets of improvements, it should be possible to raise the levels of confidence associated with major post-tensioned structures and with that confidence, engineers will be more able to design and build creative concrete bridges. This should re-establish prestressed concrete as the better value solution, particularly in the UK. Well-designed prestressed solutions are indeed the wisest use of the client's money, and are elegant structures that are a fitting legacy for any society.

References

1 Thomas C. G. and Bourne S. D. (1991) 'River Dee Viaduct: construction', *Proceedings ICE, Part 1,* 90 (2), pp. 259-280

2 Donald P. T., Knight R. G. W. and Bourne S. D. (1996) 'The design and construction of the cross-harbour road and rail links, Belfast', *Proceedings ICE - Transport,* 117 (1), pp. 28-39

3 Benaim R., Watson P. W. and Raiss M. E. (1996) 'Design and construction of the city centre viaduct for the STAR light railway transit system in Kuala Lumpur' *Proceedings of the FIP Symposium on Post-Tensioned Concrete Structures,* The Concrete Society, Camberley, UK

4 Collings D. (2001) 'The A13 viaduct: construction of a large monolithic concrete bridge deck', *Proceedings ICE - Structures and Buildings,* 146 (1), pp. 85-91

5 Collings D., Mizon D. and Swift P. (2003) 'Design and construction of the Bangladesh-UK Friendship Bridge', *Proceedings ICE - Bridge Engineering,* 156 (4), pp. 181-190

6 Bourne S., Minto B., Platt F. and Slater S. (2009) 'Design and construction of Clackmannanshire Bridge, Scotland', *Proceedings ICE - Bridge Engineering,* 162 (4), pp. 167-187

References (cont.)

7 The Highways Agency (1994) *BD58/94: The Design of Concrete Highway Bridges and Structures with External and Unbonded Prestressing,* The Highways Agency: London

8 British Standards Institution (2005) *Eurocode 2 – Design of concrete structures – Part 2: Concrete bridges – Design and detailing rules,* BSI: London, UK

9 Benaim R. (2008) *The Design of Prestressed Concrete Bridges, Concepts and Principles,* Taylor & Francis: Abingdon, UK

10 Concrete Bridge Development Group (on behalf of The Concrete Centre) (2008) *Technical Guide 11: Modular Precast Concrete Bridges,* CBDG and The Concrete Society: Camberley, UK

11 British Standards Institution (1990) *BS5400: Steel, Concrete and Composite Bridges, Part 4 – Code of Practice for Design of Concrete Bridges,* BSI: London, UK

12 The Highways Agency (1992) *Design Manual for Roads and Bridges, BD24 - The Design of Concrete Highway Bridges and Structures – Use of BS5400: Part 4: 1990,* The Highways Agency: London, UK