An introduction to bridges for structural engineers (part 2)

Simon Bourne
BSc, MSc, DIC, CEng, FIStructE, FICE
Bridge Consultant, London, UK

Synopsis

This paper concludes a two-part introduction to bridge design for structural engineers. Together, the two parts identify nine major issues relating to bridges, of which structural engineers more familiar with building design should be aware.

Part 1 (published in January 2019) addressed construction, aesthetics, value, environment and loads. Part 2 now considers materials, structural elements, structural effects and detailing.

Materials

Besides the use of masonry and timber in smaller buildings, most buildings use reinforced concrete (RC) or section steelwork as their structure. In bridges, these materials become prestressed concrete (PSC) and plated steelwork.

RC can be used for spans up to 20–30m, but for larger spans PSC must generally be used. Prestressing effectively creates a new material that is also strong in tension. It is not the prestressing tendons that carry the loads *per se* (as their force remains almost constant), but the concrete in tension. This subtle difference between internal forces and external loads is crucial.

Prestressing is applied via seven-wire high-strength steel strands, each having an ultimate strength of 1860MN/m², grouped together to form tendons. After stressing losses, followed by elastic, creep, shrinkage and relaxation losses, the long-term serviceability limit state (SLS) stress is around 1000MN/m².

Pretensioned concrete is formed by stressing strands and casting concrete around them. These form standard precast beams that span 5–50m (Figure 1). Post-tensioned concrete is formed by stressing

Figure 1
Limerick bridges (Ireland) – precast concrete beams

COURTESY OF BANAGHER PRECAST CONCRETE

tendons onto previously cast *in situ* or precast concrete.

Post-tensioned bridges can span 20–300m, each with a bespoke section to suit the particular site. Internal PSC has the strands or tendons within the section and bonded to it, whereas external PSC has unbonded tendons outside the section.

RC tends to be governed by the ultimate limit state (ULS), whereas fully prestressed internal PSC is generally governed by decompression at the SLS. There is a trend to use partially prestressed external PSC, which sits between the two ends of this spectrum – although it will generally be governed at the ULS. However, the most effective use is when the levels of prestressing are high, i.e. closer to fully prestressed PSC than RC[1], and this situation usually favours the construction method too[2].

Concrete cube strengths for PSC are usually 50–60MN/m². High-strength concrete, with strengths from 75–100MN/m², is becoming more common in precast works, mainly to allow early striking of moulds[3]. These higher strengths do not improve the prestressing performance though, which is governed by decompression. However, higher strengths can be used to make shallower and thinner sections, although the economics to date have not shown enough savings.

Many bridge concretes use significant levels of fly ash and ground granulated blast-furnace slag (GGBS) as a Portland cement replacement, as this improves the long-term strength and durability of the mix. Lightweight concretes have been used in some bridges, but the benefits are only seen with spans over 100m.

Fibre-reinforced concretes (FRCs), whose main purpose is to improve toughness and fire resistance, are not really applicable to bridges, except as formwork. Some ultra-high-strength FRCs have been used structurally in footbridges; however, these are unlikely to benefit traffic bridges as they are generally governed transversely by wheel loads and longitudinally by tensions, not compressions.

Fibre-reinforced plastics (FRPs) are not used in major bridges either. FRP bars (using glass or carbon) are not suitable, as they suffer from the same strain limitations as prestressing, i.e. strand cannot be used as passive reinforcement, as the strains are either too high (which is unserviceable) or too low (which is uneconomic). The only use of FRP bars would be in very corrosive environments.

FRP tendons (generally using aramid) are possible as a direct replacement for prestressing, but the current costs are also prohibitive[4]. FRP sections (generally using glass) are becoming increasingly suitable for footbridges, but would only be considered for traffic bridges with the use of the much stronger carbon fibre-reinforced plastic (CFRP). However, CFRP is not currently economical and does not have the ability to resist the concentrated loads on traffic bridges. It can be seen from the aerospace and motor racing industries that concentrated loads are carried by steel, aluminium or titanium, not CFRP.

Figure 2 Doncaster bridge (Yorkshire) – steel plate girders

COURTESY OF BENAIM

Building structures nowadays generally use the higher-strength S355 steel, as opposed to S275 mild steel, which has become less available. With bridges, most steel has been S355 for many years (Figure 2). If sections in either market are governed by deflection limits or fatigue, then there should be no advantage in using any higher strength than S275, unless S275 is actually more expensive. Higher grades of S420 and S460 are available, but are rarely used due to economics.

On a classic plot of allowable stress versus slenderness, it is common for most design areas to be in the middle of the plot, i.e. neither stocky and governed by yield, nor slender and governed by buckling. In these intermediate areas, the advantages of using higher-strength steels are also limited.

The other major distinction for bridges is the need for resistance to brittle fracture in colder climates. In these cases, the engineer selects the appropriate level of notch toughness to suit the lowest bridge temperature. A standard S355/J0 steel allows a maximum plate thickness at –20°C of 35mm, whereas the most common bridge steel is S355/J2, which increases this to 50mm. The next grade is S355/K2, which allows a thickness of 60mm, and is often used in larger tension flanges[5,6].

Most buildings use a standard fully threaded Grade 8.8 M20 bolt, both for ease and to avoid situations where varying bolt sizes might be confused. In bridges, this standard becomes a Grade 8.8 or 10.9 M24 high-strength friction-grip (HSFG) bolt (that is only threaded at its end). This clamps every connection together (usually at the SLS) and is essential for stiffness, robustness and tolerance to vibrations and fatigue.

In a similar vein, all welds are always continuous (as opposed to intermittent), to ensure good corrosion resistance, long fatigue life, and to best suit the automatic welding processes. Fillet welds are used extensively, often built up in layers to achieve strength – although typical 6–8mm fillet welds can be formed in one pass. Butt welds of flanges and webs are always full-penetration, both for strength and fatigue resistance.

As most welds are crucial to the integrity of the bridge, extensive regimes of non-destructive testing are used, such as surface examination using magnetic particle inspection and subsurface examination using ultrasonic testing[5].

Structural elements

Whereas RC and section steelwork ideally suit the typical spans of 5–15m in buildings, the typical spans in bridges are 10–100m, requiring the main deck elements to become PSC and plated steelwork.

The slabs of buildings and bridges are generally RC, although post-tensioned floor slabs in buildings are becoming popular. Transverse prestressing in bridges is much less common, except for the widest decks. The reason is that, in buildings, the prestressing is able to reduce the flat slab thickness; whereas, in bridges, the transverse spans are rarely greater than 10m and RC slabs can be readily profiled to optimise moment capacity. PSC anchorages at the edges of deck slabs, often in the most salt-laden environment, can also be difficult to protect.

Whereas building columns might be RC or steel sections, in bridges the supporting piers are nearly always RC, mainly on economic grounds but also for durability, robustness and impact resistance.

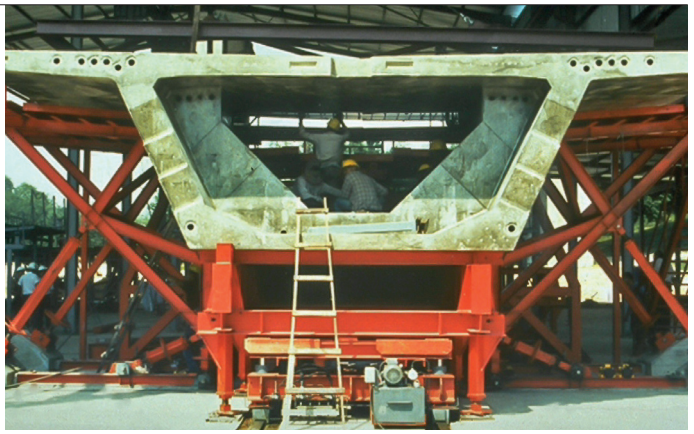

COURTESY OF BENAIM

Figure 3
STAR rail viaducts (Kuala Lumpur) – prestressed concrete box

PSC and non-compact girders are designed elastically, where the stage-by-stage build-up of loads is incorporated into the total stress (generally, at the SLS for PSC and the ULS for steelwork). In contrast, most building sections are designed plastically at the ULS, as both RC and common steel sections are compact and able to deform, enabling any locked-in stresses to be ignored.

PSC is an unusual system that often causes confusion, despite its basic simplicity. This is because it is an active system, whereas all other structural elements (RC and steelwork) are passive. The prestress loads are applied as an internal force – e.g. a centrally (and internally) prestressed column cannot buckle under the prestressing, as any tendency for the concrete to deflect is opposed by the prestressing steel. Crucially, one cannot simply add more material to a section (as might happen with RC or steelwork), as the addition of prestressing is just as likely to be detrimental as is its removal.

The best means of understanding prestressing is to look at kern heights and the effect these have on the extreme fibres, as most prestressing is designed for decompression at the SLS under frequent loads. Kern heights define the zone within which the prestressing can be applied without the section going into tension.

The kern height for a rectangle is the classic *middle-third* rule, i.e. kern over overall height is 33% – the *efficiency*. Most prestressed bridge sections have *efficiencies* of 50–60%, achieved by removing material from the webs, while optimising it in the flanges[7]. In continuous structures, there are also secondary moments, which have a large impact on the stresses and must not be ignored.

In the UK, there has been a significant reduction in the use of prestressing in bridges since a Highways Agency moratorium in 1992–96. Even though all the issues behind the moratorium were addressed many years ago, and PSC continues to be the main bridge material globally, fewer PSC bridges are built in the UK than elsewhere. This has led to a generational loss of skills within consultants and contractors[1].

"PRESTRESSED CONCRETE IS IDEALLY SUITED FOR ALL CONSTRUCTION METHODS"

Nevertheless, PSC is ideally suited for all construction methods[2] – standard, precast, pretensioned I or U-girders are used for spans up to 50m[8], whereas bespoke, post-tensioned box girders become applicable from about 30m up to 300m (Figure 3).

Plated steelwork is used for sections greater than 1m deep and suits all spans over 20m. As these sections are finely tuned to suit the loads, the assessment of local and global buckling becomes much more critical

COURTESY OF BENAIM

Figure 4
Stratford Bridge (London) – steel bathtub box

than when standard or universal sections are used.

With most bridges, the deck is a 250mm concrete slab, chosen for economy and ability to resist wheel loads. This slab conveniently acts compositely with the girder via shear studs, carrying the compressions easily at mid-span and providing a location for the top reinforcement over any piers. In these support regions, the concrete is generally cracked, meaning that cracked section properties must be used at the ULS for design, as well as for overall analysis.

Major improvements in fabrication over the last 25 years have made the production of girders highly automated. Typical *T&I machines* can automatically produce girders up to 4m deep, suiting spans up to 80–100m. Multi-girder solutions have girders 3–4m apart (to suit the use of permanent formwork), whereas the slightly more efficient ladder girders (with only two edge girders) have cross-girders at the same 3–4m centres[5].

I-girders are typically sized with thin webs that are stiffened vertically (on one side). The webs are usually non-compact – they might be compact at mid-span where the neutral axis can be close to the top slab, but will nearly always be non-compact at supports. Typically, webs are 10–25mm thick, with flanges 15–65mm thick. The smaller top flange is about 50% of the bottom flange, with its main purpose being to give enough stability to the girder before the slab is cast, while also providing a place for shear studs and formwork.

Most compression flanges are sized to make them compact locally, with outstand-to-thickness ratios less than seven. Besides the overall build-up of stresses at the ULS, there are two critical areas that need to be verified for global buckling – the top flanges prior to the slab providing restraint and any bottom flanges at the supports[6,9].

Steel box girders become applicable from about 40m up to 300m, although they are generally more appropriate beyond 80m. The best arrangement (except for the longest spans, which would use orthotropic steel throughout) is the *bathtub* box, which is fabricated in a similar way to I-girders. These also use a composite concrete deck slab and thin webs stiffened vertically, but instead of a narrow, thick bottom flange, they have a wide, thin one forming the box section (Figure 4).

The bottom flange is stiffened transversely for torsion and bending effects and may also be stiffened longitudinally to carry support compressions, although the section can also be made doubly composite with a concrete bottom slab. This solution is very efficient, by allowing concrete to carry the compression in a location where its weight has little impact.

Structural effects

Structural engineers design many complex buildings, but with bridges, where the spans are large and the structural content is high, there is a need to consider all effects, many of which are ignored in buildings.

Shear lag affects both steelwork and PSC by limiting the amount of flange that can be associated with a web. As a result, the bending stresses over the webs are higher than in traditional engineer's bending theory, and lower further from the webs.

For concrete (in composite flanges and PSC sections), the effective flange on each side of the web is about 0.1 times the distance between main *contra-flexure* points. Consider a typical 50m continuous span with a *contra-flexure* distance of approx. 35m in the span and 15m at the support, giving effective widths beyond the web of 3.5m and 1.5m, respectively. This means shear lag does not affect mid-span regions, but does have an

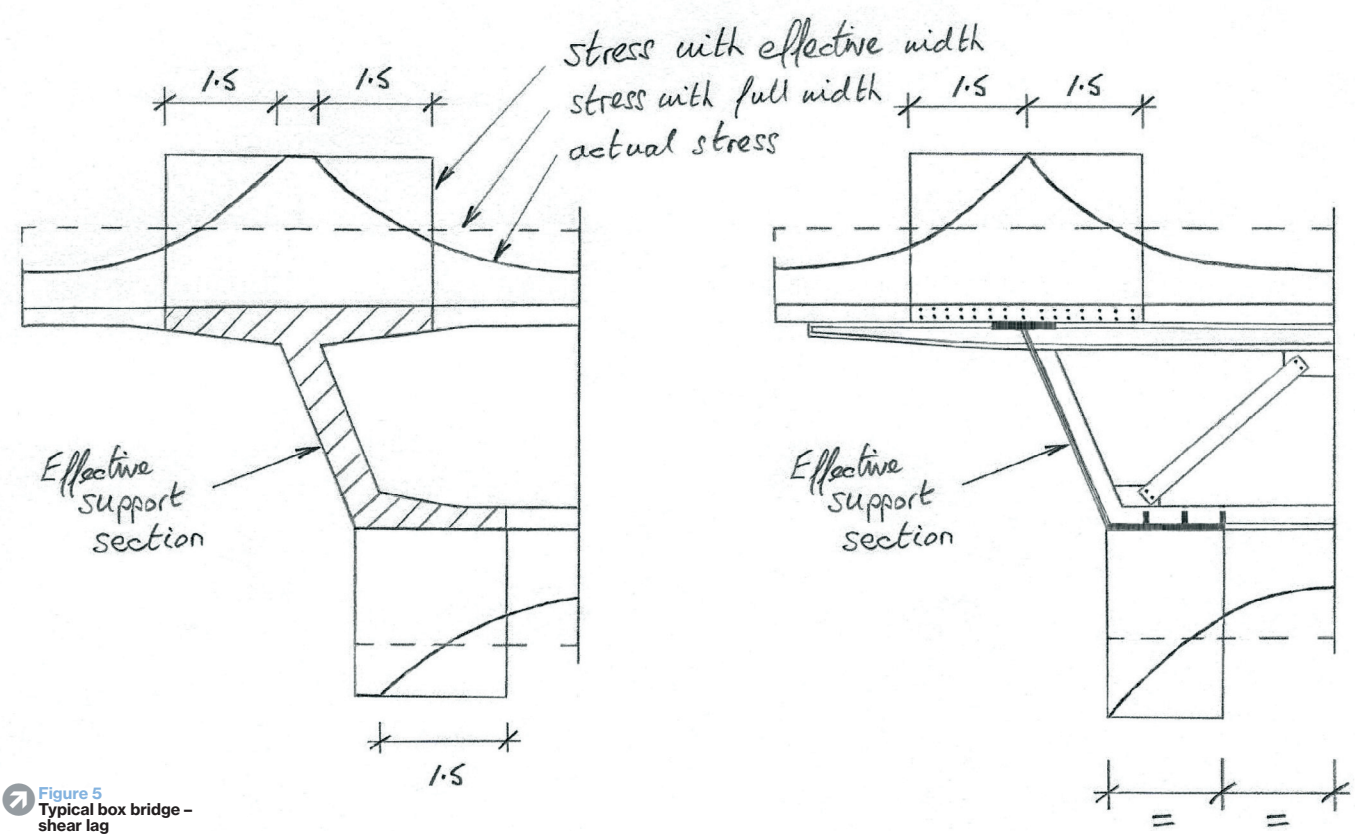

Figure 5
Typical box bridge – shear lag

impact on wide flanges near supports (Figure 5). Note that these effects apply to all *M/Z* stresses, whereas *P/A* stresses always act on the full section.

There are extensive rules for steelwork that are dependent on the longitudinal stiffening of the flanges, which for this same 50m span give effective width factors of approx. 90% in the span and 50% at the supports. For most configurations, the calculated effective widths for steel and concrete are, unsurprisingly, about the same.

In a similar vein, the rounding of moments near to point supports can be beneficial. Here, the peak elastic moment on a knife-edge support is reduced to take account of the actual support width and bridge depth. With spans over 50m, it can be a significant effect reducing peak support moments by 5–10%[10]. Three-dimensional (3D) finite-element (FE) analyses should automatically include both these effects.

Bridges are also designed to carry large loads for over 100 years and fatigue can therefore be an issue. It rarely affects RC or PSC, as the stress ranges are low or the details insensitive to fatigue, although it can occasionally be an issue on railways. Fatigue does affect steelwork though, particularly on railways where traffic loads are higher and spans shorter, although fatigue design is a significant consideration for all orthotropic steel decks. The effects can relate to both section sizing and the key details, i.e. fatigue can be critical for main plate thicknesses as well as some nodes, shear studs and welds.

Classic *S-N* plots show the allowable stress range (*S*) versus the number of cycles (*N*) for different fatigue detail classifications. The easiest method is to check that the stress range and number of cycles under a factored fatigue vehicle are less than the allowable stress range for that particular detail at 2×10^6 cycles.

It is often good detailing that avoids fatigue becoming a major issue, such as the avoidance of transverse fillet welds on a tension flange. This is the reason that vertical web stiffeners are stopped before they meet bottom tension flanges in the span regions of many girders.

The dynamic effects of vehicles must also be included, again mainly for railways – dynamic factors for small spans can be as high as two, but typically are closer to unity.

The impact of overall temperature was noted in the *Environment* section (Part 1), but bridges also need to be designed for temperature differences. These occur when there is a range of temperatures throughout the depth of the bridge. In the daytime, the

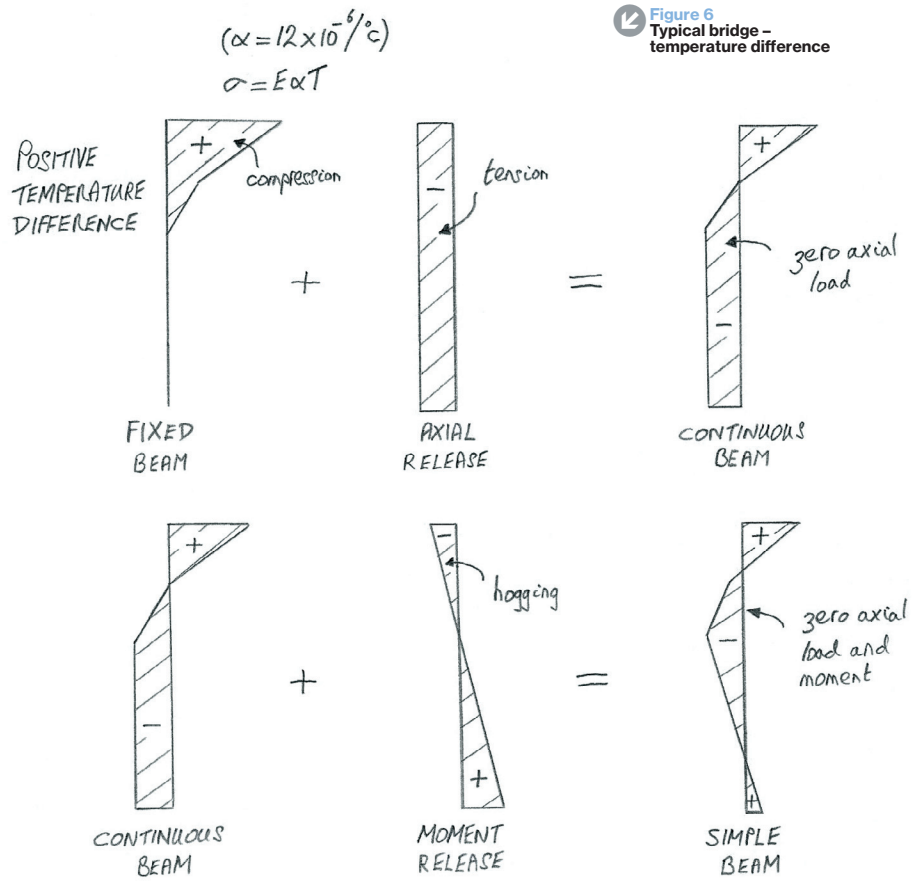

Figure 6
Typical bridge – temperature difference

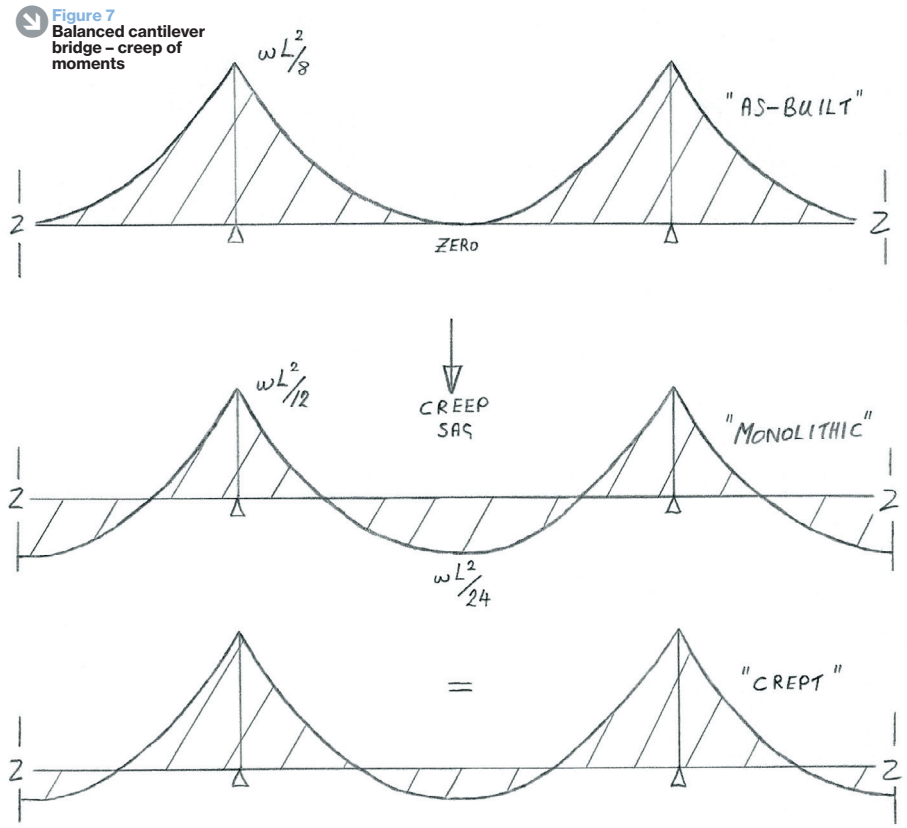

Figure 7
Balanced cantilever bridge – creep of moments

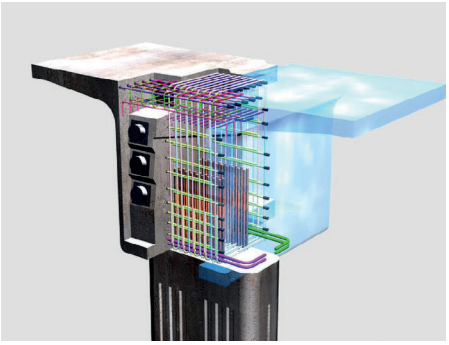

COURTESY OF BENAIM

Figure 8
West Rail viaducts (Hong Kong) – 3D reinforcement model

"THE REAL SKILL NEEDED IN THE DELIVERY OF THE BRIDGE IS IN ITS DETAILS"

COURTESY OF BENAIM

Figure 9
Clackmannanshire Bridge (Scotland) – prestressing details

top surface will be hotter as the sun warms the deck; during the evening, in reverse, the surfaces will radiate heat more quickly than the core.

The result is a set of locked-in stresses, which have axial and moment components depending on the indeterminacy of the structure (Figure 6). These elastic stresses on the top and bottom fibres are ignored for RC, external PSC and compact steelwork (which are designed plastically at the ULS), but can be significant for both non-compact steelwork[6] and internal PSC[2,7] (which are designed elastically).

Shrinkage of any concrete can be significant. In non-compact steel-composite sections, the concrete wants to shrink (while being modified by creep), but is restrained by the steelwork (with forces being transmitted via shear studs) – broadly, putting the slab in tension and the steel in compression. As with temperature differences, the result is a set of locked-in stresses with axial and moment components that are assessed at the ULS.

Shrinkage of uniform PSC sections (such as box sections cast in one phase) does not produce any moments, as the strains are constant. However, PSC sections for which the concrete is poured at different times will shrink at different rates, causing similar differential stresses to those in steel-composite sections, although the stresses are assessed at the SLS.

Creep can also be ignored for RC and composite compact steelwork (which are designed plastically at the ULS), but is accommodated in composite non-compact steelwork by the *modular ratio* method, which reduces the width of concrete flange to suit either short-term (no creep) or long-term effects (with creep). Stresses are added together for each stage, giving an elastic build-up at the ULS.

In PSC sections, all stresses can undergo creep, and these are assessed at the SLS. There can be very large changes in the overall pattern of moments for continuous girders, as they creep from those during construction (*as-built*) to those that would have existed if the bridge were built in one phase (*monolithic*).

Consider a continuous beam bridge built in balanced cantilever, which has self-weight moments of $wL^2/8$ at the supports and zero at mid-span in the *as-built* condition. Creep wants to take those moments toward those of a continuous beam, which is a sagging shift across the span of $wL^2/24$. If the creep coefficient were zero, there would be no shift, while if the creep coefficient were infinite, there would be a complete shift towards the *monolithic* moment.

Precast structures tend to have creep coefficients close to unity and creep 50–60% between the *as-built* and *monolithic* moments. *In situ* structures, being less mature, have creep coefficients closer to two and creep 70–90% of the way (Figure 7). Modern codes and software assess these effects in detail, allowing for every stage of construction.

Fortunately, the creep of the secondary prestressing moments opposes the creep of the self-weight, negating the need for a high level of precision in the calculation of the creep coefficients, unless spans are very large[11]. If the section remains constant, then the creep of the moments alone can be used. However, if the section also changes throughout construction (as precast components have further *in situ* sections added to them), then creep of the stresses has to be used[3].

Detailing

The incorporation of many mechanical and electrical (M&E) services and architectural details massively affects the structural detailing of buildings, but the structural details, *per se*, are often not subject to high loads. In bridges, this overall integration is less dominant, as there is little interaction with services, but the care needed for the design of the structural details is much more significant, as the loads are larger and more concentrated.

Nearly all bridge failures are caused by the poor design and construction of key details, rarely by the collapse of members. In essence, the members are *easy to* design, whereas the real skill needed in the delivery of the bridge is in its details. This skill applies to concept, design, detailing, specification, construction and maintenance.

It is relatively common in buildings to see details designed by subcontractors, and to a lesser extent, this same situation applies to some bridges. For most bridges, however, the engineer should design and detail all elements of the bridge. Subcontractors should certainly have their input, but responsibility for the actual design, and all its details, should be held by the *single guiding hand* that has been mentioned previously (in Part 1).

These issues are particularly important for members that are precast or fabricated, which is often the case in bridges, where

speed and ease of construction is vital. One team should bring all these elements together and detail everything on single drawings or models. It is only in this way that all the issues regarding stresses, buildability, aesthetics, tolerances, access, water and maintenance can safely and successfully be accommodated.

3D models or some forms of building information modelling (BIM) are hugely useful in visualising these issues – the study of scale drawings has always been a vital tool to any designer, allowing them to appreciate the problems that need to be solved, and to see the solutions that need to be found (Figure 8).

To a certain extent, steelwork detailing needs more care, as there is nowhere else in the system for the loads to dissipate (except through plasticity) – the stresses must be acceptable in the whole load path. In concrete detailing, great care is needed too, but there is more flexibility with the exact load path, as the member is bulkier.

The main issue with concrete is to ensure that not too much reinforcement is placed. There might be a temptation, if not having a good understanding of the co-existent forces, to simply add more bars. This is dangerous, as well-compacted, good-quality concrete is always a prerequisite. In the most awkward situations, it may be necessary to carry out trial assemblies of complex details, to ensure that the works can be completed quickly and easily, without compromising safety.

There are many guides on the detailing of RC and PSC bridges[2,10,12], although reinforcement is often determined by construction or early thermal cracking, as well as by design effects. Typical pitches of 125–150mm are standard, with the minimum bar size usually being B12. Typical bar sizes go up to B25, with B32 (or B40) occasionally being used in large RC beams or columns. These larger bars are more difficult to detail due to their bend radii and tolerances. B50 bars are very rarely used as they are too heavy to handle manually.

The critical locations where large, concentrated loads are applied (such as around bearings and anchorages) are always best analysed and detailed using struts and ties. Not only is the concept simple, but it ideally suits the linear pattern within which reinforcement is fixed.

FE analyses have their role, and can help the designer select the best struts and ties, but they also suggest a greater degree of precision than is really the case. RC is not homogeneous, isotropic or a linearly elastic material – cracking produces a material that is much better represented by struts and ties.

COURTESY OF BENAIM

Figure 10 Shoreditch rail bridge (London) – bolted splices

The correct integration of 3D stresses and reinforcement details around PSC anchorages (Figure 9) requires great care, and should be carried out by the most skilled and experienced members of the team[10].

There are also good guides that lay down the principles for steelwork detailing[5,6]. Transverse stiffeners are best sized using flats, although bulbs or angles could be used in larger sections. With the largest spans, all deck sections become orthotropic steelwork, with longitudinal stiffeners throughout (usually troughs) to carry the significant axial and local bending loads.

As most bridge spans are greater than the sensible length for fabrication, major splices are required. These are placed at notional *contra-flexure* points, but still need to be sized for significant shears and moments. The best solution is to use full-penetration butt welds, which are seen on most box girders, but fabricators of I-girders will tend to prefer the use of bolted splices for ease of site assembly (Figure 10).

The temporary stability of the top flange of asymmetric girders is critical and will generally determine the size of this flange. This is not a condition usually seen in buildings, as symmetric rolled sections have greater stability.

The common solution is to use transverse bracing to hold two girders together, as a braced pair. This is much preferred over any plan bracing, which is awkward and expensive to fabricate and install. The transverse bracing is left in place, which is fine as long as there is no continuity across the width of the bridge, which will pick up unwanted loads and fatigue stresses.

The stability of I-girder bottom flanges is provided by the support and intermediate bracing, with the flange simply sized as a restrained strut.

The role of site supervision has declined

enormously over the last 20 years, as contractors operate quality assurance systems. However, this process of self-certification may leave projects exposed to unscrupulous practices, to hasten programme or reduce costs. This is certainly a major issue (and a factor in failures) in the developing world and there is growing evidence that it is also becoming a serious issue in developed countries.

All owners need to strike a balance between achieving best value while not compromising integrity or safety. Many collapsed bridges have failed during construction, where they often have loads that are higher than, or very different to, the service conditions, with key details often loaded for the first time.

Conclusions

I have described nine key issues (construction, aesthetics, value, environment, loads, materials, elements, effects and detailing) which are not always seen by structural engineers, but which are important for bridges.

I have described the concept of a *single guiding hand*, whereby the best solution is driven by an experienced engineer, working through the whole process, from concept, procurement, detailed design and construction, through to a bridge free of maintenance. This *guiding hand* might be an individual or a team led by a strong individual. It is important to produce the best solution at the early stages of the project, which needs skilful engineers from the start to deliver this quality and value throughout the project.

Engineers must not be preoccupied with codes and analyses – engineers create and deliver solutions, not spreadsheets *per se*. I have deliberately not mentioned codes at all, as most bridges should really be independent of them – a detailed design needs to be done eventually, but most key decisions are not made as a result of codes and analytical complexities, but as a result of the nine issues highlighted.

Good skills and experience are the most important traits needed. Across the globe, bridges are designed to a wide variety of codes, and thus it is better to fully appreciate the fundamental issues addressed here, as the laws of physics do not ever change, with time or location.

The importance of detailing has been highlighted across the papers. While the benefits of hand sketching to scale have now been almost lost, the counterpoint is the rise of computer modelling, such as FE analyses and various forms of 3D or BIM models. Used correctly, these tools are massively useful ways of allowing engineers to appreciate the problems that need to be solved. However, FE or BIM will never solve or resolve a poor solution – that needs skill and experience.

Of all the issues noted, a thorough understanding of construction is probably the most important, as no major bridge can be designed without knowing exactly how it will be built, in all its stages. The design and detailing of a launched bridge is utterly different to a bridge built span by span, or by any other method. This integration of the construction process is so profound (and so much more dominant than seen in most buildings) that design and construction (D&C) in its various forms is always the best solution.

Having worked almost exclusively in D&C for 40 years, I am a huge supporter of this process, as long as all parties trust and respect each other. If contractors claim against their designers too readily (they would never claim against their own in-house teams), then designers simply design conservatively, which stifles innovation and benefits nobody.

Integral to this close working between designer and contractor is the need for independent supervision. All bridges should undergo independent design checks (which is actually very common globally) and, equally, have independent construction checks through a competent site supervision process. Unfortunately, this supervision has become increasingly rare worldwide, even though its cost is small compared to that of the overall project – this decline in genuine and independent site supervision must surely be reversed.

So, the best bridge engineers are creative individuals with a wide range of social, visionary and technical skills. These *single guiding hands* are the true engineers – not simply technocrats – who have a vision and aesthetic sense, leadership, client and stakeholder awareness and a wide range of technical skills.

They will fully understand construction, with a strong appreciation of methods, details, programmes, costs and safety, in order to bring best value for the owner, stakeholders and wider community.

Brunel should be proud of them, and perhaps such engineers are the best way to highlight the important role of engineers in our society today. The word *engineer* is related to *ingenuity* not *engine* and therefore we should all aspire to be ingenious.

REFERENCES

- 1) Bourne S. (2013) 'Prestressing: recovery of the lost art', *The Structural Engineer*, 91 (2), pp. 12–22
- 2) Concrete Bridge Development Group (2015) *Technical Guide No. 14: Best Construction Methods for Concrete Bridges – Cost Data*, Camberley: CBDG and The Concrete Society
- 3) Concrete Bridge Development Group (2014) 'Concrete Bridge Design and Construction series. No. 7: Concrete bridge construction methods – precast', *The Structural Engineer*, 92 (7), pp. 41–46
- 4) Concrete Bridge Development Group (2014) 'Concrete Bridge Design and Construction series. No. 9: High performance concretes and new materials', *The Structural Engineer*, 92 (9), pp. 35–40
- 5) Steel Construction Institute (2015) *SCI Publication P185: Guidance notes on best practice in steel bridge construction*, Ascot: SCI
- 6) Steel Construction Institute (2014) *SCI Publication P356: Composite highway bridge design*, Ascot: SCI
- 7) Concrete Bridge Development Group (2014) 'Concrete Bridge Design and Construction series. No. 3: Prestressing for concrete bridges', *The Structural Engineer*, 92 (3), pp. 48–52
- 8) Concrete Bridge Development Group (2010) *Technical Guide No. 13: Integral Concrete Bridges to Eurocode 2*, Camberley: CBDG and The Concrete Society
- 9) Steel Construction Institute (2014) *SCI Publication P357: Composite highway bridge design: worked examples*, Ascot: SCI
- 10) Concrete Bridge Development Group (2014) 'Concrete Bridge Design and Construction series. No. 10: Concrete bridge detailing', *The Structural Engineer*, 92 (10), pp. 30–35
- 11) Concrete Bridge Development Group (2014) 'Concrete Bridge Design and Construction series. No. 6: Concrete bridge construction methods – *in situ*', The Structural Engineer, 92 (6), pp. 40–44
- 12) Concrete Bridge Development Group (2017) *Technical Guide No. 15: Bridge Replacement Guide*, Camberley: CBDG and The Concrete Society

HAVE YOUR SAY

To comment on this article:
- **email Verulam at tse@istructe.org**
- **tweet @IStructE #TheStructuralEngineer**